Module 3 : Sequence Components and Fault Analysis

Lecture 13 : Sequence Modeling (Tutorial)

Objectives

In this lecture we will solve tutorial problems on fault analysis in sequence domain

- Per unit values of all element impedance in the given system.
- Reduction of the circuit for the given fault locations.
- S-L-G fault current for the given system.

1. Fig 13.1 shows the single line diagram of a 13.8kV system connected to a 480V bus through a 13.8kV/480V transformer. Two motor loads of 400hp and 600hp are connected to the bus through three parallel three core copper cables. If a 3 phase bolted fault occurs at F_1, compute the fault currents. Repeat the calculations for fault at F_2.

Ans: Let us take base power as 1000kVA and base voltage as 480V.

Then base current $= \dfrac{kVA \times 1000}{\sqrt{3} \times base\ voltage}$

$$= \frac{1000 \times 1000}{\sqrt{3} \times 480} = 1202.8A$$

Base impedance

$$= \frac{Base\ voltage\,(per\ phase)}{Base\ current} = \frac{480/\sqrt{3}}{1202.8}$$

$$= 0.2304\Omega$$

Now, we have to convert all impedances element into per unit values on a common base. Here the impedance base is 0.2304 Ω.

Short circuit contribution from 13.8kV source = 600MVA.

Source Modeling

Short circuit current

$$= \frac{600 \times 10^6}{\sqrt{3} \times 13.8 \times 10^3} = 25102A$$

X/R ratio = 15

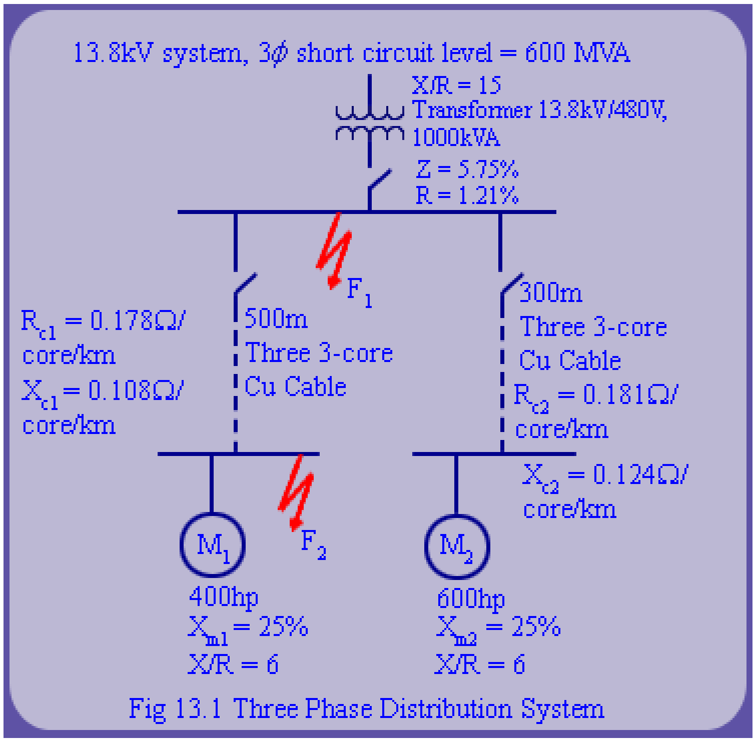

Fig 13.1 Three Phase Distribution System

$$Z_s = \frac{base\ kVA}{short\ circuit\ kVA} = \frac{1000}{600 \times 10^3} = 0.00166pu$$

$\frac{X_s}{R_s} = 15 \quad Z_s = \sqrt{R_s^2 + X_s^2}$ or $Z_s^2 = R_s^2 + X_s^2$

1. Ans: i.e. $(0.00166)^2 = R_s^2 + (15R_s)^2$

$R_s = 0.00011pu \quad X_s = 0.00165pu$

i.e. Z_s in pu = 0.00011 + j0.00165

1000kVA Transformer Modeling.

Z_T = 5.75% R_T = 1.21%

The per unit value of $R_T = \frac{base\ kVA}{Transformer\ kVA} \times \frac{\%R_T}{100}$

$= \frac{1000}{1000} \times \frac{1.21}{100} = 0.0121pu$

Per unit value of $Z_T = \frac{1000}{1000} \times \frac{5.75}{100} = 0.0575pu$

$X_T = \sqrt{Z_T^2 - R_T^2} = 0.0562\ pu$

i.e. Z_T in pu = 0.0121 + j0.0562

Cable C_1 Modeling

Length of cable $C_1 = 500m$,

Resistance of one conductor per km = 0.178 Ω

Reactance of one conductor per km = 0.108 Ω

Since, three conductors are in parallel, equivalent resistance and reactance for 500m length is given by,

$$R_{c1} = \frac{0.178}{3} \times \frac{500}{1000} = 0.0297\Omega$$

$$X_{c1} = \frac{0.108}{3} \times \frac{500}{1000} = 0.018\Omega$$

Converting R_{c1} and X_{c1}, into per unit,

R_{c1} in pu $= \frac{Actual\ value}{base\ value} = \frac{0.0297}{0.2304}$

= 0.129

X_{c1} in pu $= \frac{0.018}{0.2304} = 0.078$

i.e. Z_{c1} in pu = 0.129 + j0.078

1. Ans: Cable C_2 Modeling

Length of cable $C_2 = 300m$

Resistance of one conductor per km is given as 0.181 Ω and reactance / km is given as 0.124 Ω. Since, three conductors are in parallel, equivalent resistance and reactance for 300m cable is given by,

$$R_{c2} = \frac{0.181}{3} \times \frac{300}{1000} = 0.0181\Omega$$

$$X_{c2} = \frac{0.124}{3} \times \frac{300}{1000} = 0.0124\Omega$$

Converting into pu

$$R_{c2} \text{ in pu } = \frac{0.0181}{0.2304} = 0.0786 \text{ pu}$$

$$X_{c2} \text{ in pu } = \frac{0.0124}{0.2304} = 0.0538 \text{ pu}$$

i.e. Z_{c2} in pu = 0.0786 + j0.0538

Motors

Note that 1hp = 746watts; if we assume a motor power factor of 0.746, then equivalent motor kVA will be unity. Hence, we will assume that 1hp is equivalent to 1kVA.

Subtransient reactance = 25%

X/R Ratio = 6

Per unit reactance of motor 1

$$X_{m1} = \frac{base\,kVA}{motor\,kVA} \times \frac{\%X_{m1}}{100}$$

$$= \frac{1000}{400} \times \frac{25}{100} = 0.625 \text{ pu}$$

$$R_{m1} = \frac{0.625}{6} = 0.1042 \text{ pu}$$

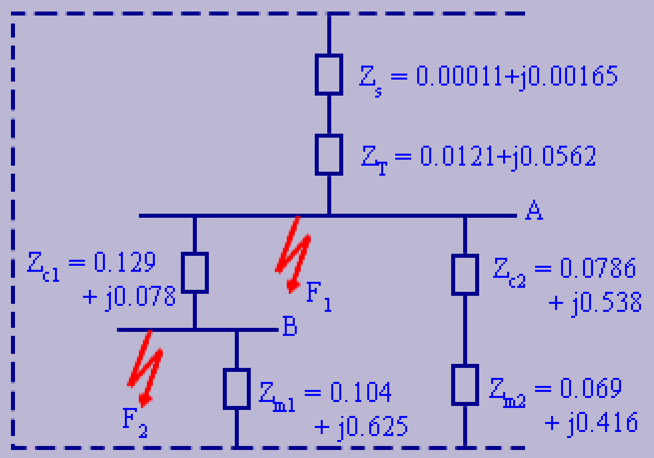

Fig 13.2 Equivalent Circuit for Fig 13.1

For motor 2

$$X_{m2} = \frac{1000}{600} \times \frac{25}{100} = 0.416 \text{ pu}$$

$$R_{m2} = \frac{0.416}{6} = 0.069 \text{ pu}$$

Z_{m2} in pu = 0.069 + j0.416

The equivalent circuit of the system used to calculate the Thevenin's equivalent at node A is shown in fig 13.2. The dotted lines indicate the ground potential.

1. Ans: Fault at F_1

We now desire to compute Thevenin's impedance at node A.

For fault at F_1, the network as shown in fig 13.2 can be reduced to network as shown in fig 13.3. Hence, Thevenin's impedance, Z_{th} is given by,

$$\frac{1}{Z_{th}} = \frac{1}{Z_s + Z_T} + \frac{1}{Z_{c1} + Z_{m1}} + \frac{1}{Z_{c2} + Z_{m2}}$$

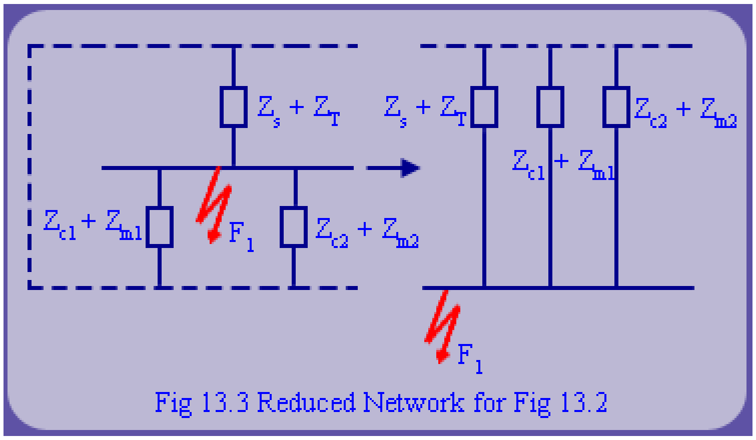

Fig 13.3 Reduced Network for Fig 13.2

$$= \frac{1}{0.01221 + j0.05785} + \frac{1}{0.233 + j0.703} + \frac{1}{0.1476 + j0.4698}$$

$$= \frac{1}{0.059\angle 78.1^\circ} + \frac{1}{0.74\angle 71.6^\circ} + \frac{1}{0.49\angle 72.6^\circ}$$

$$= 16.95\angle -78.1 + 1.35\angle -71.6^\circ + 2.04\angle -72.6^\circ$$

$$= 3.5 - j16.6 + 0.426 - j1.28 + 0.61 - j1.9$$

$$= 4.536 - j19.78 = 20.3\angle -77.1^\circ$$

$$Z_{th} = \frac{1}{20.3\angle{-77.1^\circ}} = 0.049\angle{77.1^\circ}\, pu$$

Therefore, three phase fault current at fault $F_1 = \dfrac{ba\, se\, current}{Z_{th}}$

$$= \frac{1202.8}{0.049}$$

$$= 24547A$$

1. Ans: Fault at F_2

For fault at F_2, the network shown in fig 13.2. can be reduced as shown in fig 13.4.

Calculation of Z

$$Z = Z_{c1} + \frac{1}{\dfrac{1}{Z_s + Z_T} + \dfrac{1}{Z_{c2} + Z_{m2}}}$$

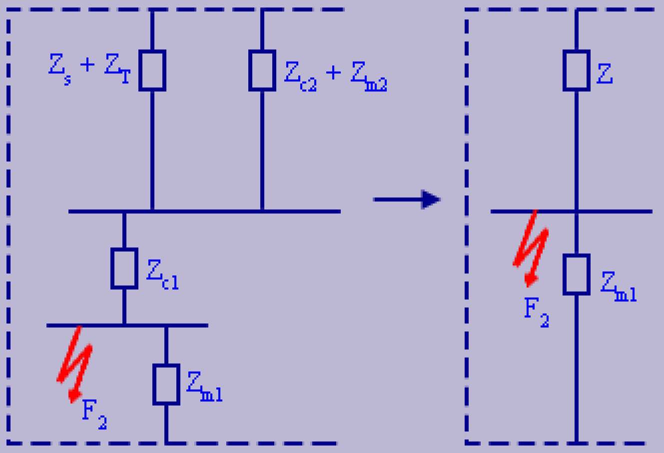

Fig 13.4 Thevenin's Equivalent at F_2

$$= 0.129 + j0.078 + \frac{1}{\dfrac{1}{0.01221 + j0.05785} + \dfrac{1}{0.1476 + j0.4698}}$$

$$= 0.129 + j0.078 + \frac{1}{3.5 - j16.6 + 0.61 - j1.9}$$

$$= 0.129 + j0.078 + \frac{1}{4.11 - j18.5} = 0.129 + j0.078 + 0.054\angle{77.5}$$

$$= 0.129 + j0.078 + 0.012 + j0.053 = 0.141 + j0.131 pu$$

$$\frac{1}{Z_{th}} = \frac{1}{Z} + \frac{1}{Z_{m1}} = \frac{1}{0.141 + j0.131} + \frac{1}{0.104 + j0.625}$$

1. Ans:

$$= \frac{1}{0.192\angle{42.7^\circ}} + \frac{1}{0.633\angle{80.5}} = 3.83 - j3.53 + 0.26 - j1.56$$

$$= 4.09 - j5.09 = 6.53\angle{-51.2^\circ}$$

i.e., $Z_{th} = \dfrac{1}{6.53\angle{-51.2^\circ}} = 0.153\angle{51.2^\circ}$

Therefore, the total three phase fault current at $F_2 = \dfrac{ba\, se\, ampere}{per\ unit\ Z_{th}}$

$$= \frac{1202.8}{0.126} = 7861.44A$$

Fig 13.5 shows the single line diagram of a 3 bus system. The sequence data for transmission lines and

2. generators

are given in table 1. If a bolted single line to ground fault occurs at F, calculate the fault current. If the fault impedance is j0.1 pu; what will be the fault current?

Ans: Let us take E as 1 pu. For a SLG fault, Fault current

$$= \frac{3E}{Z_0 + Z_1 + Z_2 + 3Z_f}$$

where Z_0 = Zero sequence impedance

Z_1 = Positive sequence impedance

Z_2 = Negative sequence impedance

We have to find out the Thevenin's equivalent zero, positive and negative sequence impedances with respect to fault F.

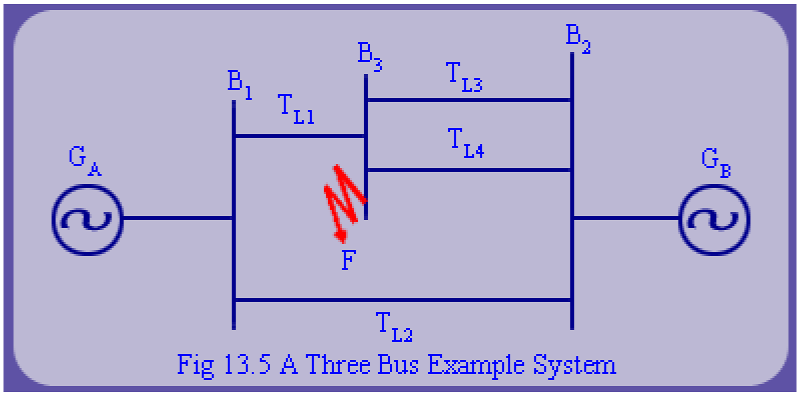

Fig 13.5 A Three Bus Example System

Description	Sequence Data in pu		
	Zero	Positive	Negative
Generator - A	j0.03	j0.25	j0.15
Generator - B	j0.02	j0.20	j0.12
Transmission Line 1	j0.14	j0.08	j0.08
Transmission Line 2	j0.17	j0.13	j0.13
Transmission Line 3	j0.10	j0.06	j0.06
Transmission Line 4	j0.12	j0.06	j0.06

2. Ans: Zero Sequence Impedance

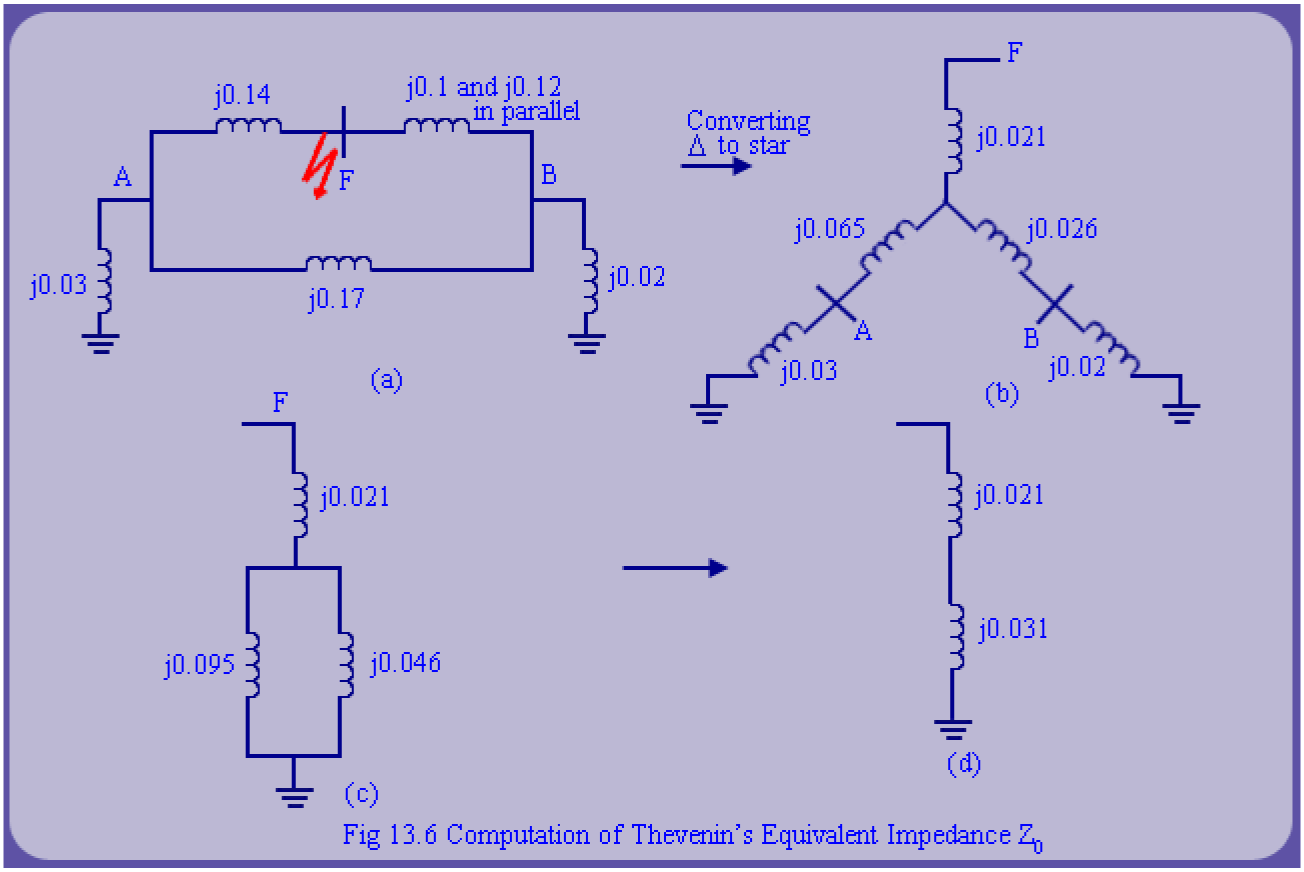

Fig 13.6 Computation of Thevenin's Equivalent Impedance Z_0

For calculating Z_0, the circuit shown in fig 13.5 is reduced as shown in fig 13.6.

$$Z_0 = j0.021 + j0.031 = j0.052pu$$

2. Ans: Positive Sequence Impedance

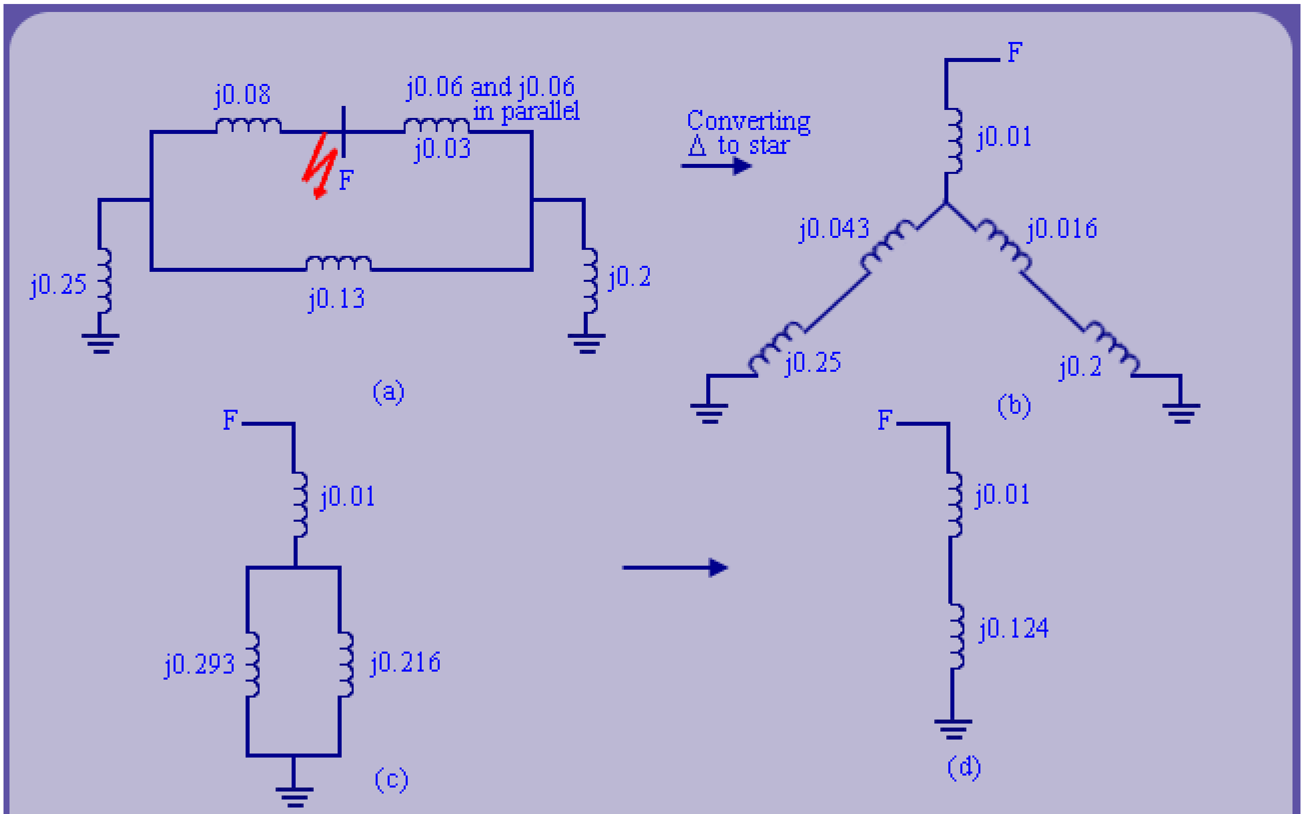

Fig 13.7 Computation of Thevenin's Equivalent Impedance Z_1

Similarly, positive sequence impedance Z_1 can be found out by reducing the circuit as shown in fig 13.7.
i.e. Z_1, positive sequence impedance = j0.01 + j0.124
= j0.134 pu

2. Ans: Negative Sequence Impedance

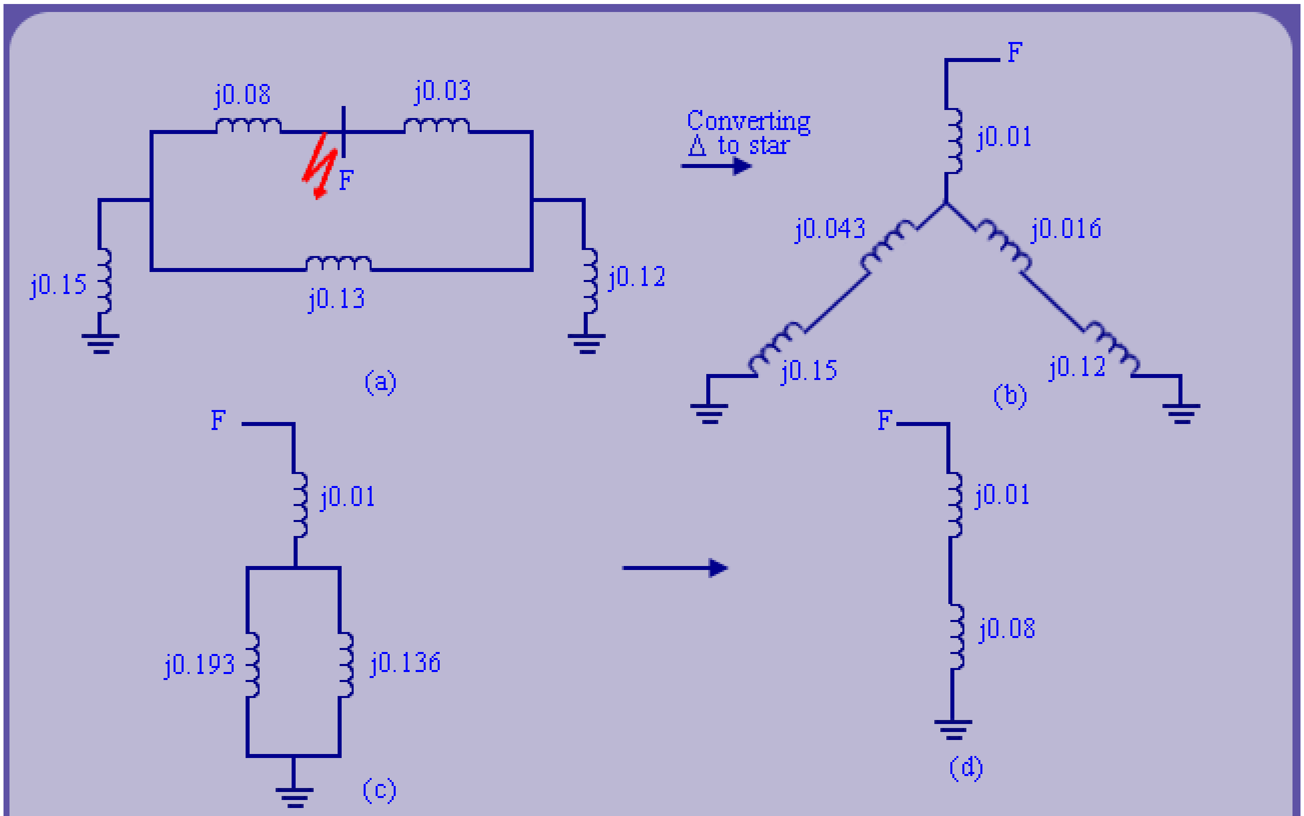

Fig 13.8 Computation of Thevenin's Equivalent Impedance Z_2

Negative sequence impedance Z_2

For negative sequence impedance the circuit can be as shown in fig 13.8.

i.e. negative sequence impedance $Z_2 = j0.01 + j0.08$

$= j0.09$ pu

Now, fault current $I_f = \dfrac{3E}{Z_1 + Z_2 + Z_0} = \dfrac{3 \times 1\underline{|0}\ pu}{j0.134 + j0.09 + j0.052}$

$$= \frac{3 \times 1\underline{|0}}{j0.276} = \frac{3 \times 1\underline{|0}}{j0.276\underline{|90}} = 10.869\underline{|-90^\circ}$$

If fault impedance $Z_f = j0.1$, then $I_f = \dfrac{3E}{Z_1 + Z_2 + Z_0 + 3Z_f} = \dfrac{3 \times 1\underline{|0}\ pu}{j0.276 + j0.1 \times 3} = 5.208\underline{|-90^\circ}$

Review Questions

1. Calculate the symmetrical fault currents at locations F_1 and F_2 of fig 13.9.

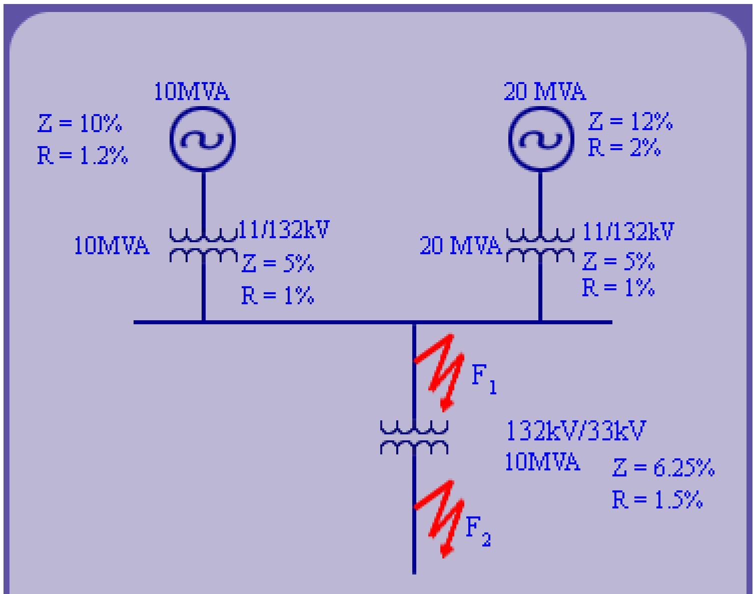

Fig 13.9 A Three Phase Distribution System

2. For the system shown in example no. 2 , find out the fault current for

a) SLG fault with j0.1fault impedance.

b) L-L fault and L-L-G fault between b - c phases.

c) L-L fault and L-L-G fault with j0.1fault impedance. Single line diagram of this question is shown in fig 13.5.

3. Single line diagram of a system is shown in fig 13.10. The base value is taken as 30MVA, 34.5kV. The positive and negative sequence impedances of load are $1.0\angle 25.84^\circ pu$, $0.60\angle 29^\circ pu$ respectively. Load voltage is kept at 1.0 pu. Calculate the fault current for fault at F. Assume that zero sequence reactance of generator is zero.

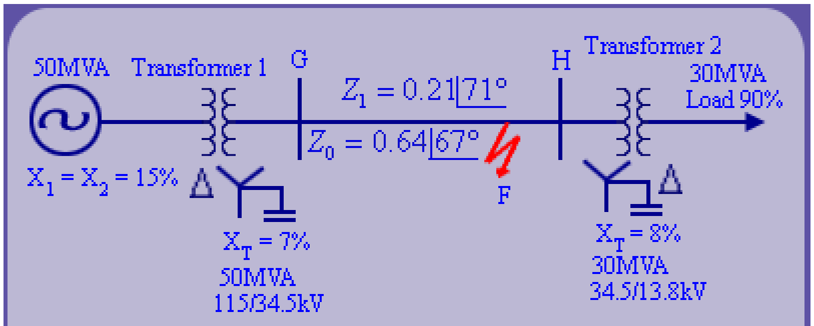

Fig 13.10 A Three Phase Distribution System

Recap

In this lecture we have learnt the following:

- To calculate per unit values of different elements in a system.
- Reduction of the given complex circuit for different fault locations.
- Three phase symmetrical fault current calculation.

- Fault current calculation of the given system.